SMA- Female PCB/ Pannel Edge Mount 4-Hole Flange – RF Coaxial Connector

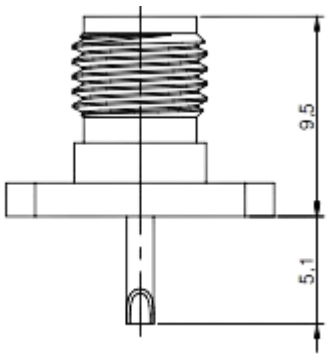

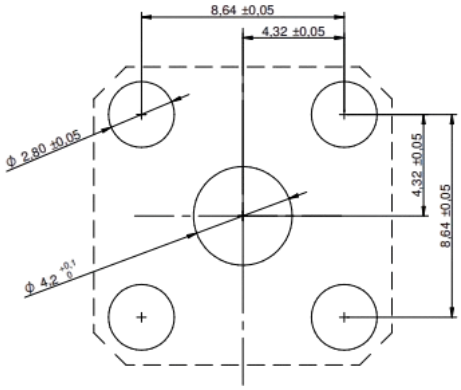

Description	
Type	SMA JACK PCB/Panel Mount Connector
Model	TE-CON-SMA-F-4HF-PCB-18G

	Material	Finish
Center Contact	BeCu	Gold Plated
Dielectric	PTFE	-
Body	Brass	Gold Plated
Nut	Brass	Gold Plated



Environment Specifications	
Operating Temperature	-65 ~ 165 °C
Relative Humidity	≤ 95%
Applications	Indoor/Outdoor
Waterproof Grade	IP65

Electrical Specifications	
Frequency Band	DC – 18 GHz
VSWR	≤ 1.4 max
Durability	500 Cycles
Power	500 W
Impedance	50 Ω
Insulation Resistance	≥ 5000MΩ
Dielectric Withstand Voltage	500V

TE TECH SOLUTION
Head Office: Mala Bhawan, Near Lohar Basti, Rangamati, Sindri, Dhanbad Jharkhand – 828122
R&D Centre: FF-02, 1st Floor, STPI Building, Near BIT Sindri, Sindri, Dhanbad, Jharkhand (India) – 828123
Branch Office: 38, Hanuman Layout, 1st Cross, Ramchandrapura, Jalahalli – Post, Bangalore (India) – 560013
Tel : +91-7829139667, 8910780736, 0326-3560859 | Email: enquiry@tetechsolution.com | www.tetechsolution.com